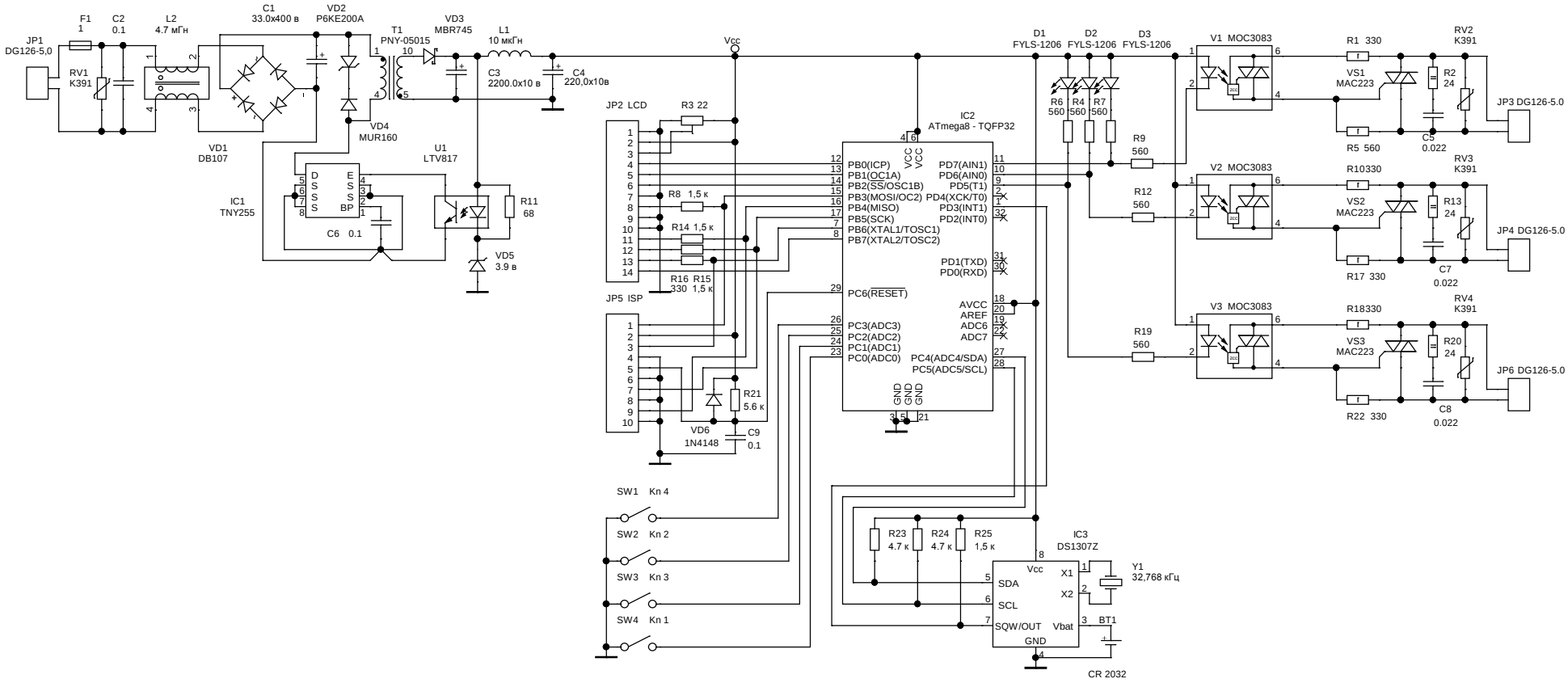
JP1
DG126-5,0
F1
1
C2
0.1
L2
4.7 мГн
RV1
K391
VD1
DB107
C1
33.0x400 в
VD2
P6KE200A
VD4
MUR160
T1
PNY-05015
VD3
MBR745
L1
10 мкГн
C3
2200.0x10 в
C4
220,0x10в
Vcc
IC1
TNY255
C6 0.1
U1
LTV817
R11
68
VD5
3.9 в
JP2 LCD
R3 22
R8 1,5 к
R14 1,5 к
R16 330
R15 1,5 к
JP5 ISP
R21
5.6 к
VD6
1N4148
C9
0.1
IC2
ATmega8 - TQFP32
PB0(ICP)
PB1(OC1A)
PB2(SS/OSC1B)
PB3(MOSI/OC2)
PB4(MISO)
PB5(SCK)
PB6(XTAL1/TOSC1)
PB7(XTAL2/TOSC2)
PC6(RESET)
PC3(ADC3)
PC2(ADC2)
PC1(ADC1)
PC0(ADC0)
PD7(AIN1)
PD6(AIN0)
PD5(T1)
PD4(XCK/T0)
PD3(INT1)
PD2(INT0)
PD1(TXD)
PD0(RXD)
AVCC
AREF
ADC6
ADC7
PC4(ADC4/SDA)
PC5(ADC5/SCL)
VCC
GND
J21
D1
FYLS-1206
D2
FYLS-1206
D3
FYLS-1206
R6 560
R4 560
R7 560
R9
560
R12
560
R19
560
V1 MOC3083
V2 MOC3083
V3 MOC3083
R1 330
R5 560
VS1
MAC223
R2
24
C5
0.022
RV2
K391
JP3 DG126-5.0
R10330
R17 330
VS2
MAC223
R13
24
C7
0.022
RV3
K391
JP4 DG126-5.0
R18330
R22 330
VS3
MAC223
R20
24
C8
0.022
RV4
K391
JP6 DG126-5.0
SW1 Кп 4
SW2 Кп 2
SW3 Кп 3
SW4 Кп 1
R23
4.7 к
R24
4.7 к
R25
1,5 к
IC3
DS1307Z
SDA
SCL
SQW/OUT
X1
X2
Vbat
GND
Y1
32,768 кГц
BT1
CR 2032