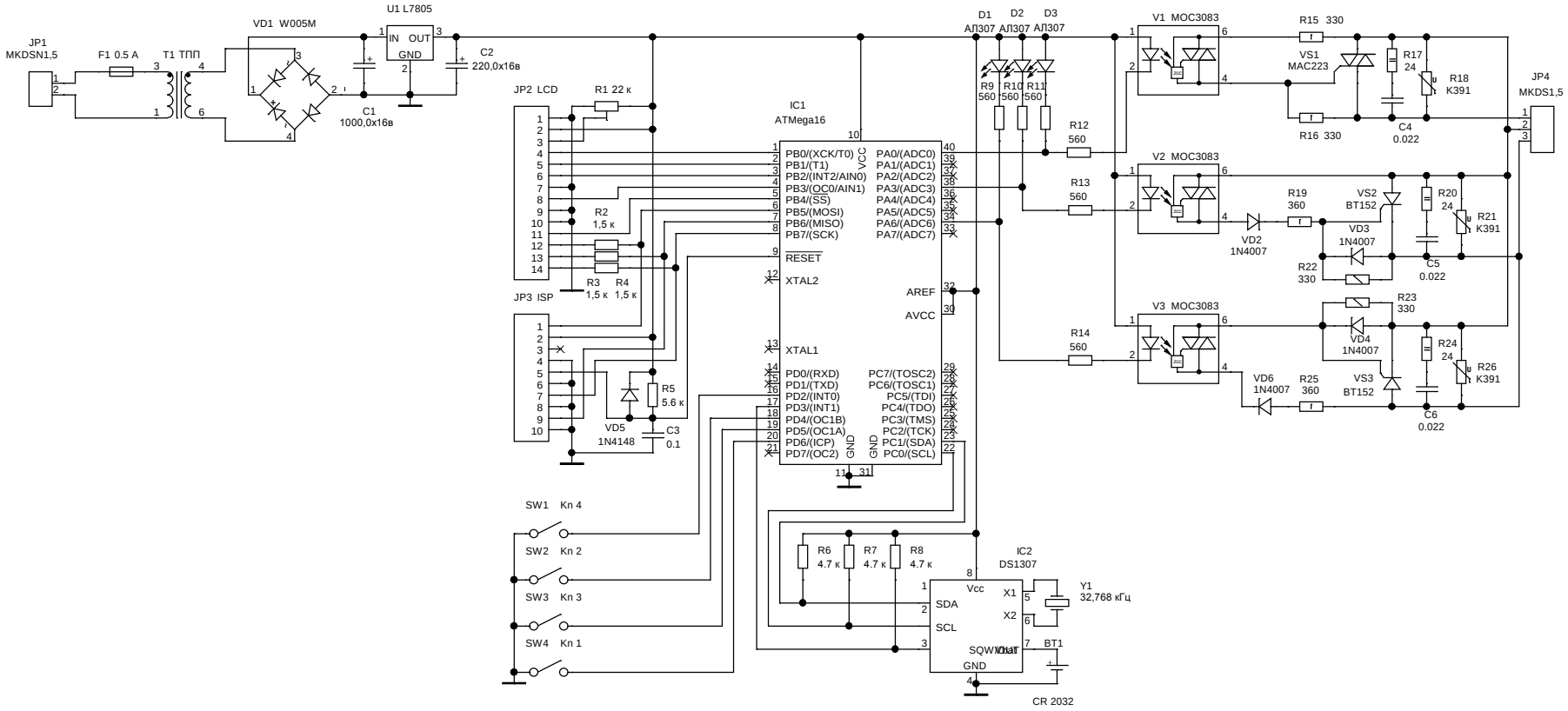
JP1
MKDSN1,5
F1 0.5 A
T1 ТПП
VD1 W005M
U1 L7805
IN OUT
GND
C1
1000,0x16в
C2
220,0x16в
JP2 LCD
R1 22 к
R2
1,5 к
R3
1,5 к
R4
1,5 к
JP3 ISP
R5
5.6 к
VD5
1N4148
C3
0.1
IC1
ATMega16
PB0/(XCK/T0)
PB1/(T1)
PB2/(INT2/AIN0)
PB3/(OC0/AIN1)
PB4/(SS)
PB5/(MOSI)
PB6/(MISO)
PB7/(SCK)
RESET
XTAL2
XTAL1
PD0/(RXD)
PD1/(TXD)
PD2/(INT0)
PD3/(INT1)
PD4/(OC1B)
PD5/(OC1A)
PD6/(ICP)
PD7/(OC2)
VCC
GND
AREF
AVCC
PA0/(ADC0)
PA1/(ADC1)
PA2/(ADC2)
PA3/(ADC3)
PA4/(ADC4)
PA5/(ADC5)
PA6/(ADC6)
PA7/(ADC7)
PC7/(TOSC2)
PC6/(TOSC1)
PC5/(TDI)
PC4/(TDO)
PC3/(TMS)
PC2/(TCK)
PC1/(SDA)
PC0/(SCL)
D1
АЛ307
D2
АЛ307
D3
АЛ307
R9
560
R10
560
R11
560
R12
560
R13
560
R14
560
V1 MOC3083
V2 MOC3083
V3 MOC3083
R15 330
R16 330
VS1
MAC223
R17
24
R18
K391
C4
0.022
JP4
MKDS1,5
R19
360
VS2
BT152
VD2
1N4007
VD3
1N4007
R20
24
R21
K391
R22
330
C5
0.022
R23
330
VD4
1N4007
R24
24
R26
K391
VD6
1N4007
R25
360
VS3
BT152
C6
0.022
SW1 Кп 4
SW2 Кп 2
SW3 Кп 3
SW4 Кп 1
R6
4.7 к
R7
4.7 к
R8
4.7 к
IC2
DS1307
Vcc
SDA
SCL
SQW/OUT
GND
X1
X2
Y1
32,768 кГц
BT1
CR 2032